MATERIAL REQ'D.	R.C.

NOTE:
DIM'S IN [ ] ARE IN MM

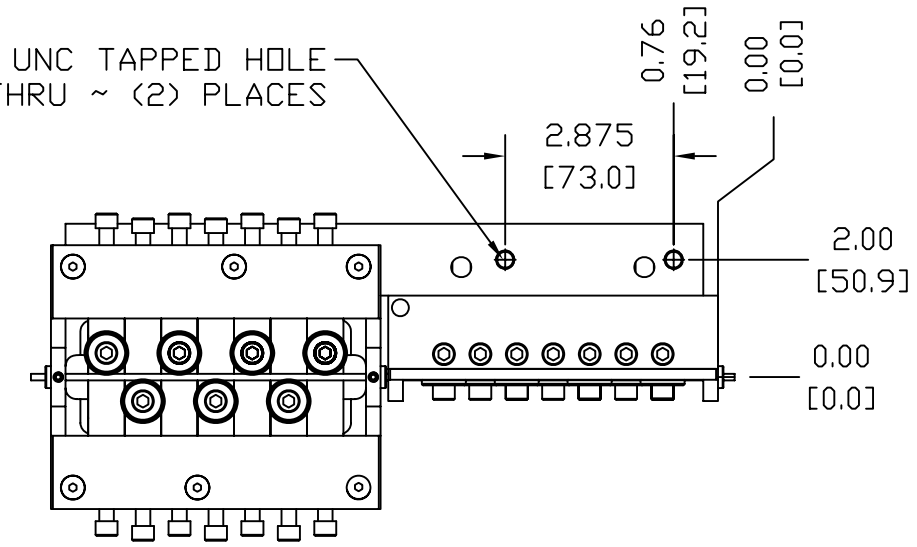

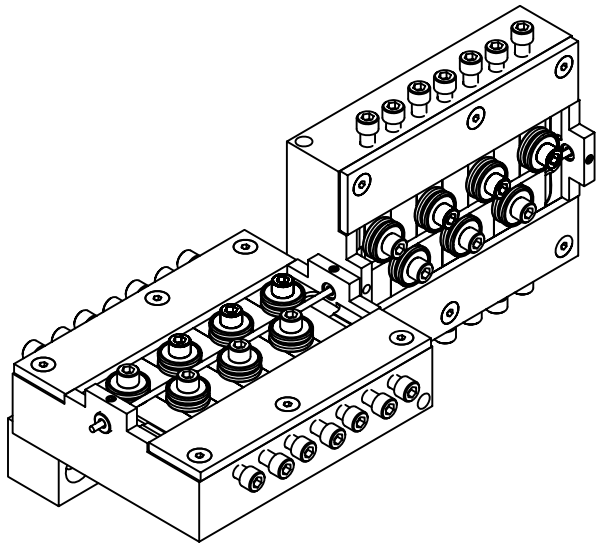

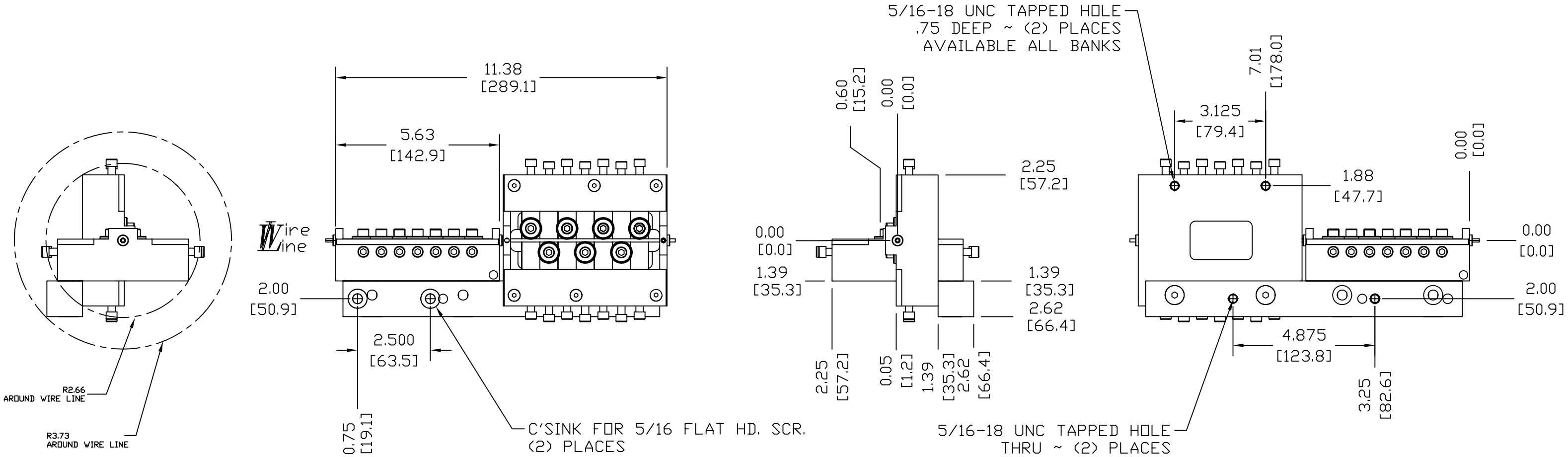

REV	ECN	CHG BY	DATE

#03 2-PLANE ASSY
MOUNTING LOCATIONS

TAK ENTERPRISES

TOLERANCE UNLESS OTHERWISE STATED

∠	± 3°	FRACT	+/- 1/16
⊥	± 0.0003	.X	± .032
◎	± 0.0002	.XX	± .015
⌖	± 0.0005	.XXX	± .005
⟷	± 0.0005	.XXXX	± .0005

CAD	
DWN	TKS
CHK	
SCALE	
DATE	102797

DRAWING / PART NO. 1003-002A
PART NAME #03 2-PLANE MOUNTING ASSY
CUSTOMER